LM/R

Belt-driven centrifugal fans for extracting hot air up to 300°C from extract hoods and for industrial applications
Especially designed for extracting hot air in industrial applications

Fan:
- Sheet steel casing
- Galvanised sheet steel multiblade impeller
- Belt-driven motor mounted on the fan bench
- With one or two cooling impellers mounted on the motor shaft to dissipate the heat

Motor:
- IE3 efficiency motors for powers equal to or higher than 0.75 kW except single-phase, 2-speed and 8-pole
- IP55 protection
- Three-phase 230/400 V 50 Hz (up to 4 kW) and 400/690 V 50 Hz (powers higher than 4 kW)
- Maximum temperature of air to be carried: -25°C +300°C

Finish:
- Corrosion resistant with heat resistant paint up to 300°C

On request:
- Special windings for different voltages
- Stainless sheet fan casing

Dimensions mm

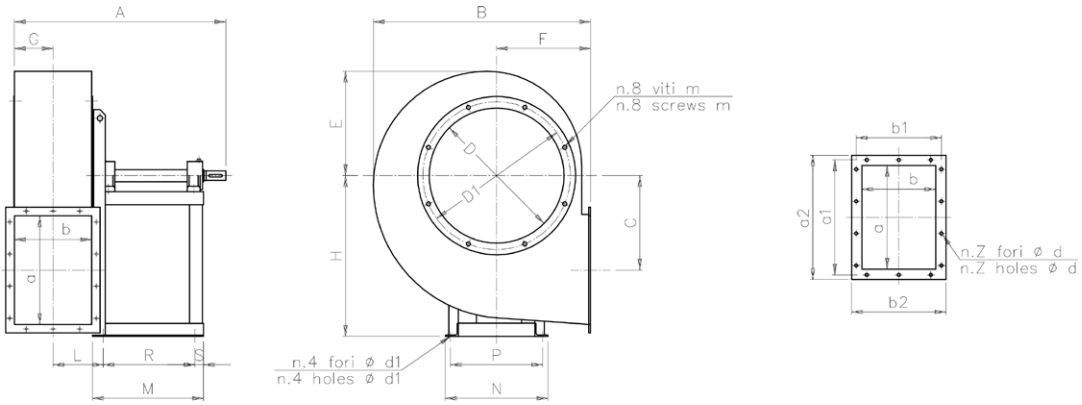

MOD.	A	B	C	E	F	G	H	L	M	N	P	R	S	d1	D	D1	d	a x b	kg*
LM 25 R	580	430	175	200	190	80	340	130	350	330	295	260	40	12	260	280	8	225x160	55
LM 28 R	600	485	222	226	215	92	400	140	350	330	225	260	40	12	290	310	8	240x180	60
LM 33 R	780	570	255	268	250	104	450	233	502	384	348	330	47	12	350	370	8	296x200	70
LM 39 R	730	695	250	315	318	130	470	275	420	440	395	215	60	12	400	430	8	356x250	85

MOD.	a x b	a1	b1	a2	b2	T	Z	d
LM 25 R	255 x 160	250	190	279	214	100	6 + 4	12
LM 28 R	240 x 180	270	210	294	234	70	8 + 6	12
LM 33 R	296 x 200	325	230	350	255	80	8 + 6	12
LM 39 R	356 x 250	385	280	410	305	100	8 + 6	12

Characteristic curves

LM/R 25

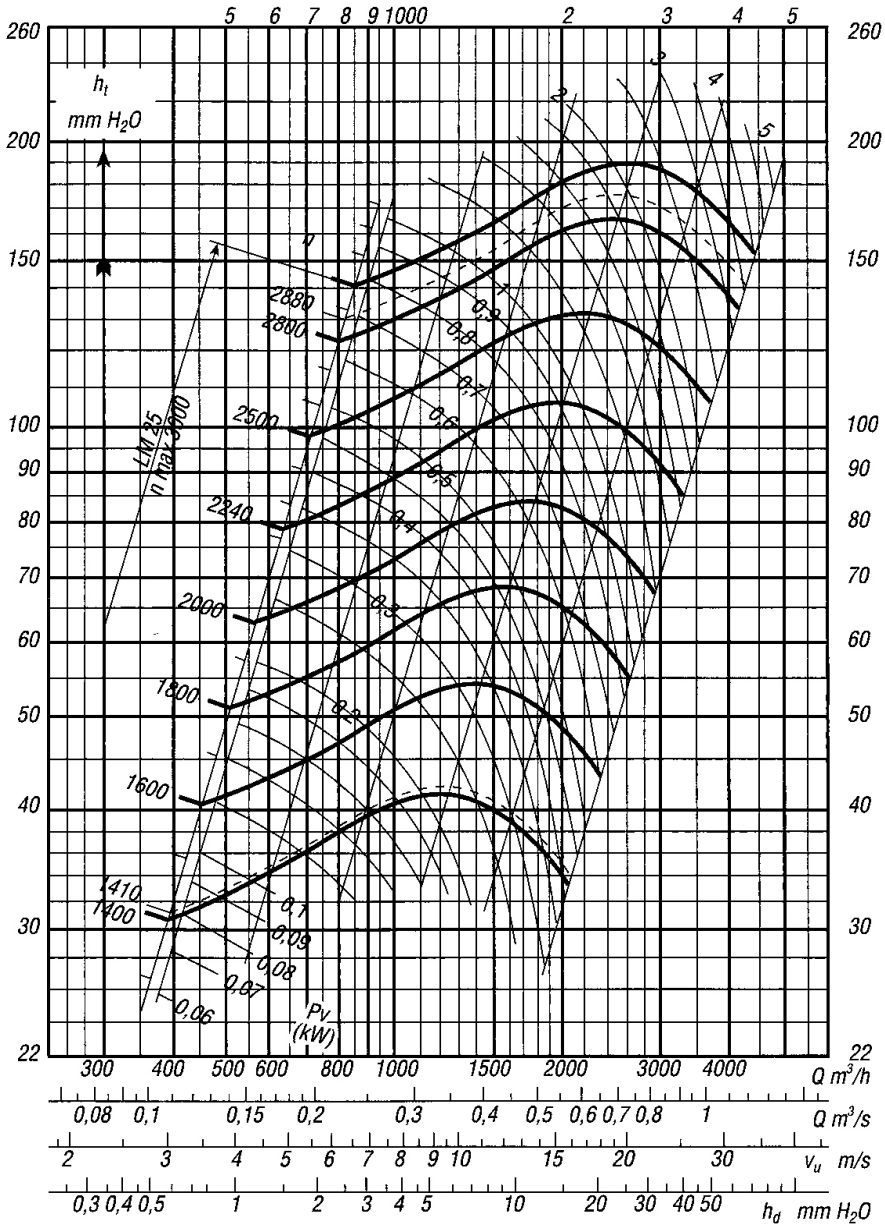

Characteristic curves

LM/R 28

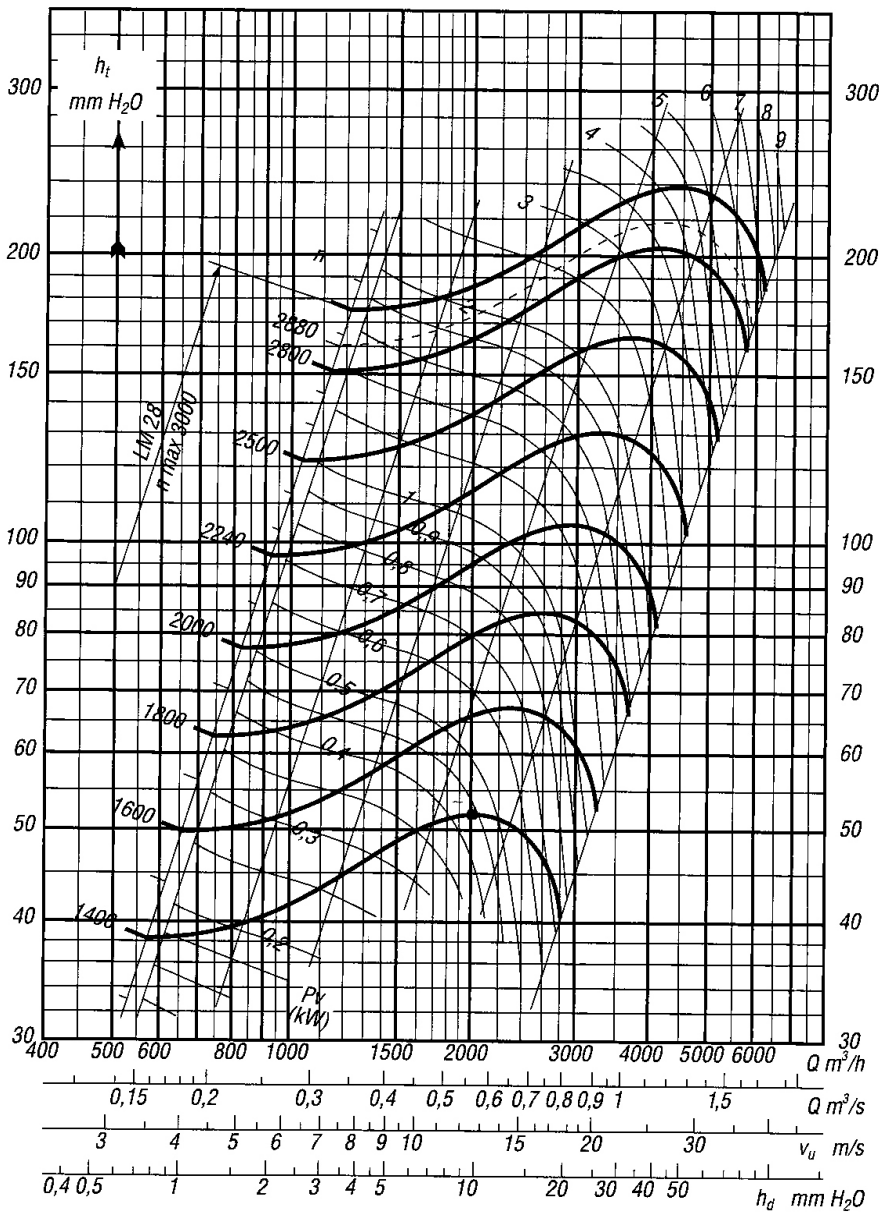

Characteristic curves

LM/R 33

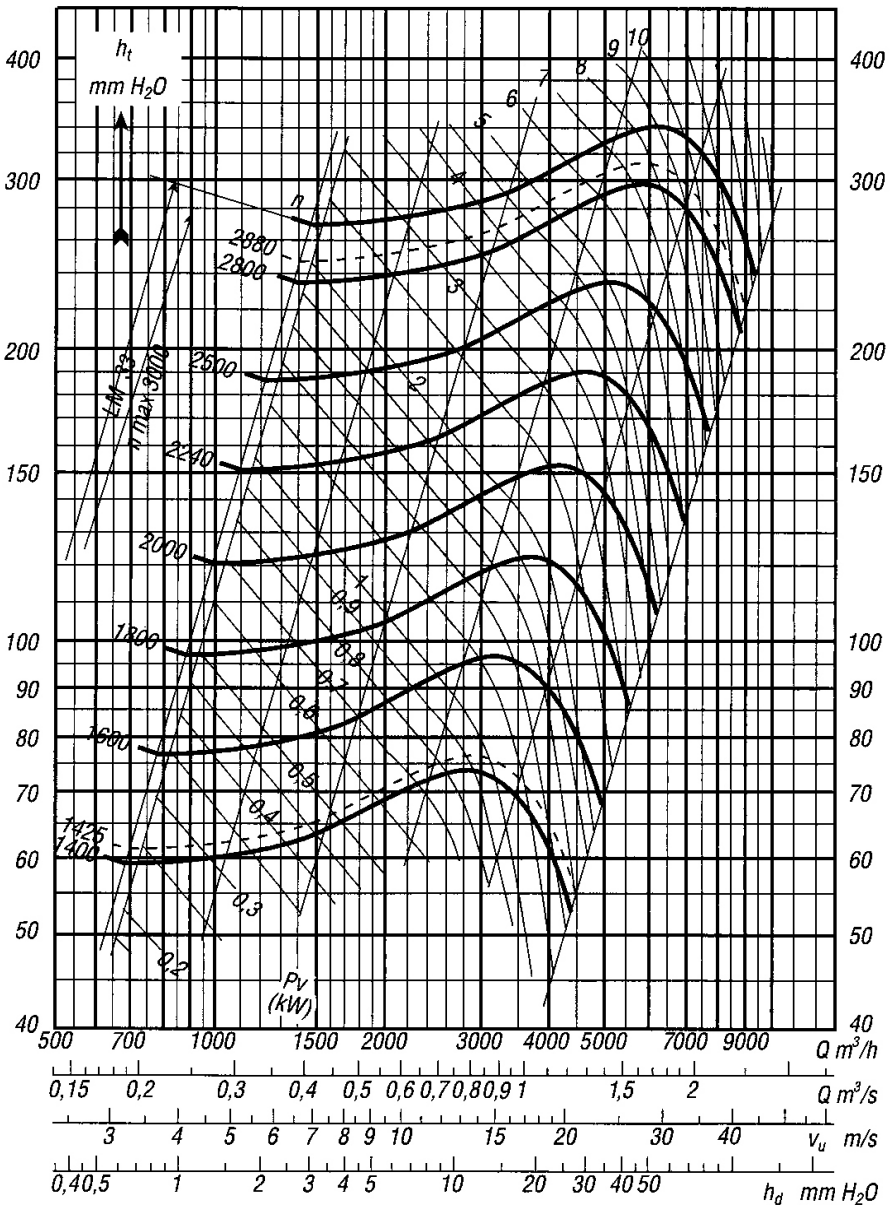

Characteristic curves
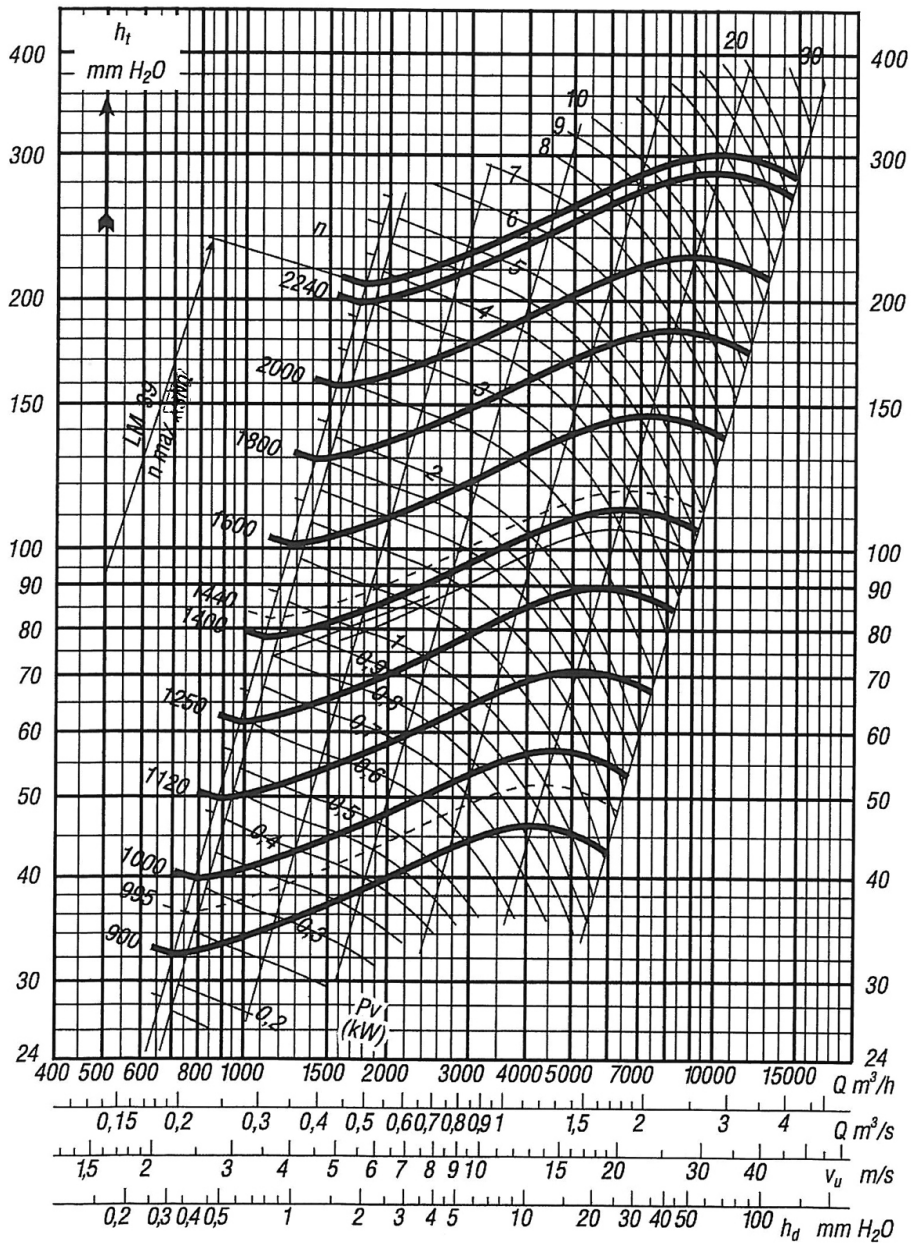
LM/R 39